George Young WB6JYK
Sierra High School
Tollhouse CA 93667

In the Eye of the Beholder

—ugly transformers make beautiful power supplies

Sixty to one hundred dollars or more for a heavy-current power supply tends to cool one's enthusiasm a bit. Winding your own transformer is one way to pare the cost a bit.

The tendency toward on-board regulation suggests that what is needed is a heavy-current unregulated supply with the unregulated input voltage around 7 to 10 V dc for a 5-volt bus. The 7-volt-minimum figure is necessary because the regulators must have a little more in than they put out. The 7-volt figure also is the loaded dc voltage, which means that the loaded dc will be higher.

Let's assume that you want 5 volts at 10 Amps and 12 volts at 1 Amp. (You may want different voltages or currents, but the process to follow will be the same.)

Power in Watts equals volts multiplied by Amperes. Watts = volts x Amps. I need (5 x 10) + (12 x 1), or 62 Watts, right? Wrong. I need more volts in both instances to allow room for the regulators to work. I use a design voltage of 8 V ac for a 5-volt regulated circuit and 15 V ac for a 12-volt circuit. I have seen articles about projects that used 6.3 V ac for the 5-volt circuit and 12.6 V ac for the 12-volt circuit. I have tried both these values and have not been satisfied with the results. I have used 7 V ac and 14 V ac successfully for 5- and 12-volt regulated circuits, respectively. The power that is not actually used gets turned into heat by the regulators, so some kind of trade-off is required.

If I use a design figure of 8 V ac and 15 V ac for the two supplies, I need (8 x 10) + (15 x 1), or 95 Watts. This must be translated into iron. At 60 cycles power line frequency, the amount of power a transformer will handle is directly related to how much iron it contains. So, how much iron do we need?

Over here in the corner of the shop is a vacuum-tube TV set. On the back of the set is a little placard that says: "120 volts alternating current, 60 cycles only; 175 Watts maximum."

Since the power into a transformer is essentially the same as the power out of the transformer, this transformer has iron in it worth 175 Watts. This transformer

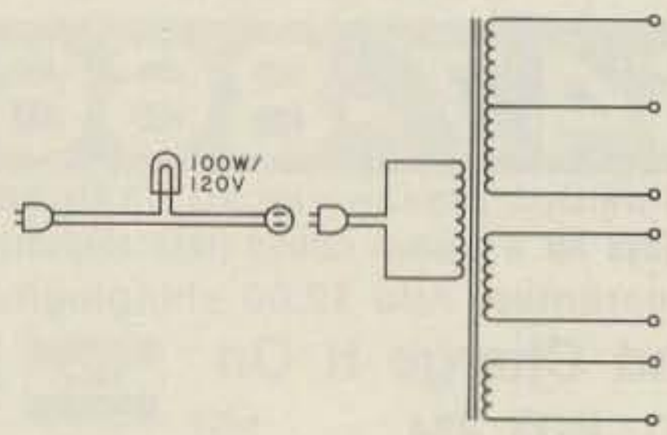

Fig. 1. Initial and final transformer test circuit.

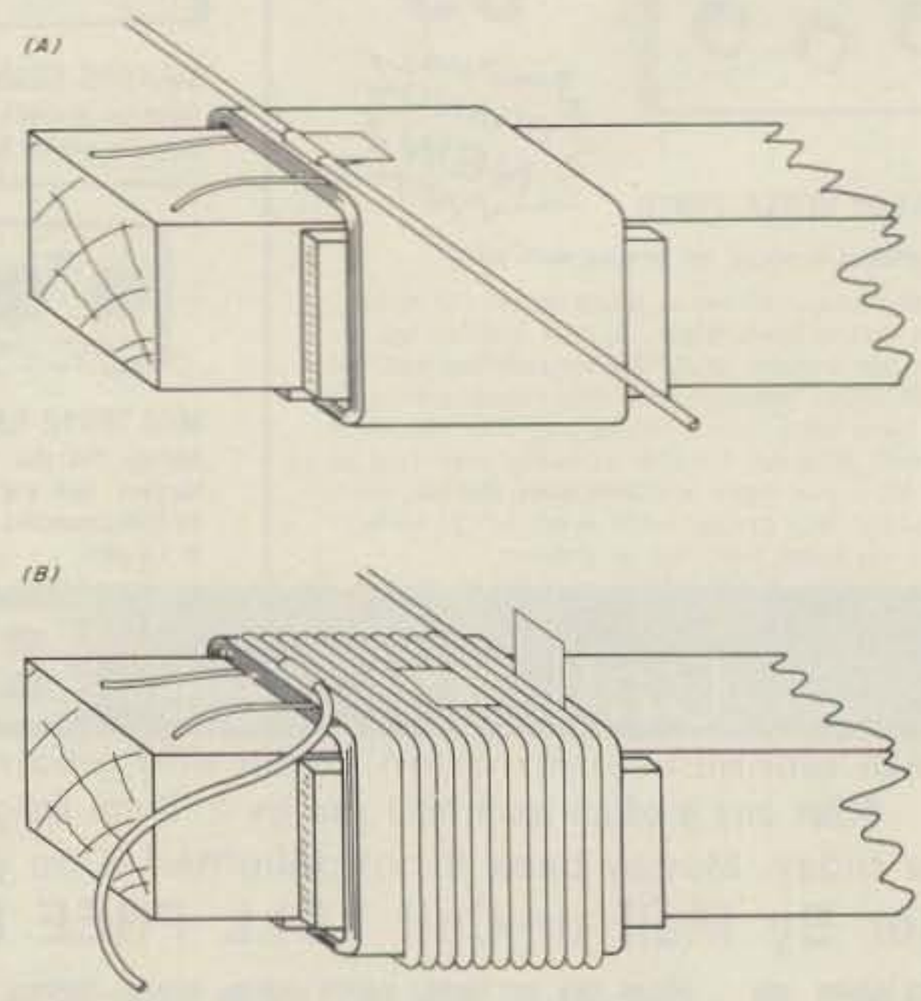

Fig. 2. Starting and finishing windings.

Photo A. The beast.

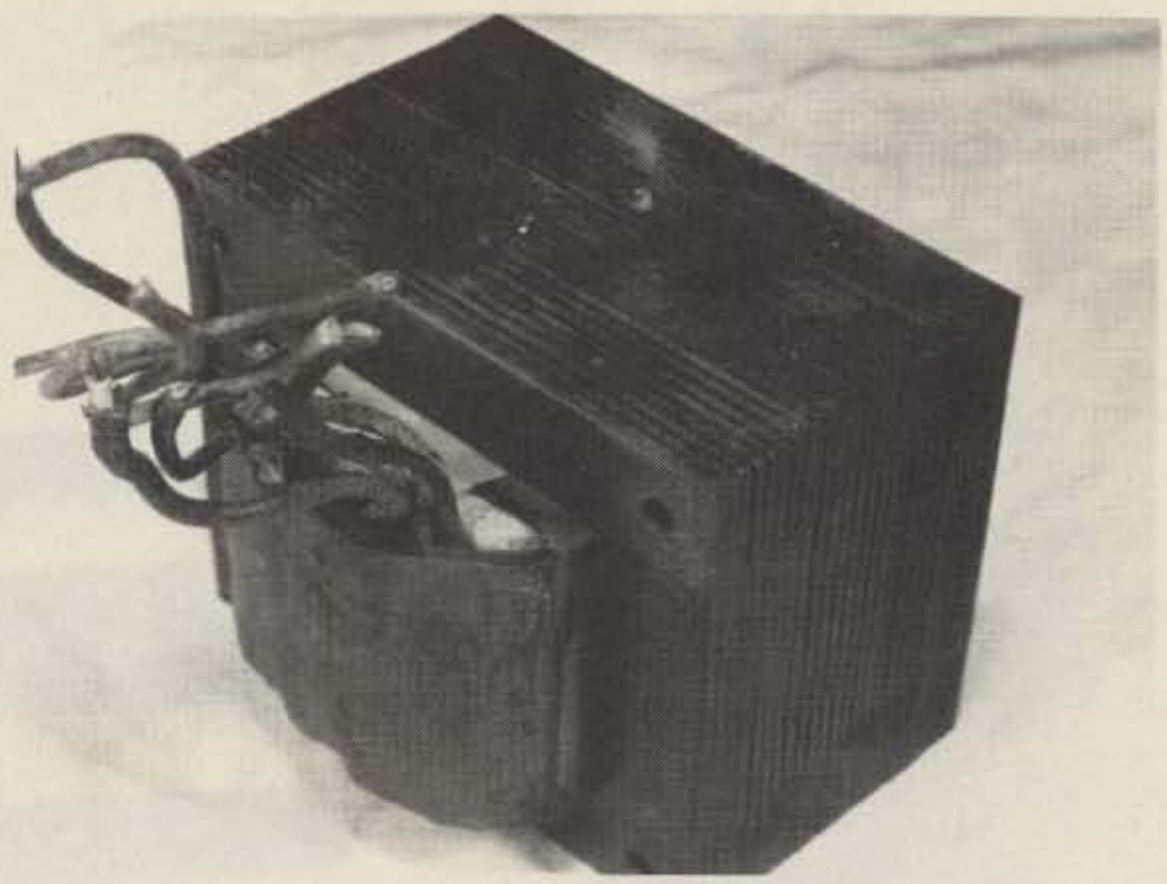

Photo B. Covers and static shield removed.

would do nicely for the 95-Watt supply I intend to build.

But, you say, the little placard is gone from the back of yours. Or the entire back is missing. Or the transformer has already been removed from the TV set, and there is now no way to determine its original power consumption. Well then, you'll have to do things a little differently.

Here is another transformer lying here on the workbench. It states on the side of it that the secondary is 36 V ac @ 3 Amperes. That multiplies out to 108 Watts. Let's measure the iron in it. To do this, measure the cross-sectional area. This is the iron that is inside the windings. The iron on the outside of the windings doesn't count in the power calculations. I measure 2.5 x 3.5 cm. Multiplying, that gives 8.75 square centimeters. If I divide 108 Watts by 8.75, I get a little over 12 Watts per square centimeter. This transformer would also be suitable for my supply.

And over here is the "beast." It's a TV transformer that has been separated from the TV chassis sometime earlier in its history. The cross-sectional area measures about 4 cm x 7 cm. That's 28 square centimeters. And 28 x 12 is about 336 Watts. Converting the measurements to square inches and using the table in Lew McCoy's article (*QST*, November, 1976), I get 350 Watts. That's close enough for me.

> Approximate power in Watts from a 60-cycle transformer equals cross-sectional area (in cm^2) multiplied by 12.

I am going to use this beast, and, as long as I am going to go to the trouble of rewinding it, I will put on two windings for the 12-volt supply and two windings for the 5-volt supply. In the winding area, called the window area, I will put on as many 8 V ac windings as I have room for. I have #18 wire and #14 wire on hand. This is one reason for the multiple windings. Each additional winding will add its current-carrying capacity to other windings with the same number of turns. You can put on one winding that will carry 30 Amperes using #10 (at least) wire, or you can put on 3 windings that will carry at least 10 Amps each. The end result will be the same — 30 Amps of capability. As long as the labor is going to go into rewinding, you might as well take advantage of all the power available in the iron you have selected.

Step One

Step one could have been the selection of the transformer to be rewound. However, most of you will not have multiple choices in this area. You will have one transformer available and, having determined its power capability, you need to decide which circuit to use. One point before I move on: You can't get 200 Watts from 150 Watts of iron. You can use 350 Watts of iron for 200 Watts output. 350 Watts of iron in a 200-Watt supply is fine business, as there will be lots of room for you to wind your wire in.

Only two choices of circuit are really available. The full-wave bridge circuit, shown in Fig. 3, and the full-wave center-tapped circuit, shown in Fig. 4. In the following short discussion, you will get an insight into why I decided to wind on multiple windings.

The full-wave bridge circuit requires the least number of turns in the rewinding process. If I give my high school students or my adult school students the options of full-wave bridge versus full-wave center-tapped circuits, they invariably opt for the fewer number of turns for the bridge circuit. You will have to evaluate the following trade-offs and make your own decisions.

In the full-wave bridge circuit of Fig. 3, a pair of diodes is switched across the 8-volt winding during each half of the ac cycle. This means that this pair is in series during this interval. All the current flows through the winding and through each diode in the pair. On the other half of the ac cycle, the remaining pair of diodes in the bridge gets switched in, and all the current then flows through this pair in turn. For a 10-Amp circuit, each diode in the bridge must carry 10 Amps, and the secondary winding must also carry 10 Amps. Since the pair of diodes conducting at this time is in series, each of the two diodes need withstand only half as much inverse voltage. Or each diode need have only half the peak inverse voltage (piv) of the full-wave center-tapped circuit.

In the full-wave center-tapped circuit, each of the diodes must withstand the full piv of the circuit. In either of the two circuit choices, this piv decision for the two circuits is not very important for the 8 V ac winding, because it is hard to find diodes with less than a 25 piv rating.

In the full-wave center-tapped circuit of Fig. 4, only one diode and one half of the secondary winding gets switched into the circuit on each half of the ac cycle. This means that each diode needs to carry only half of the total

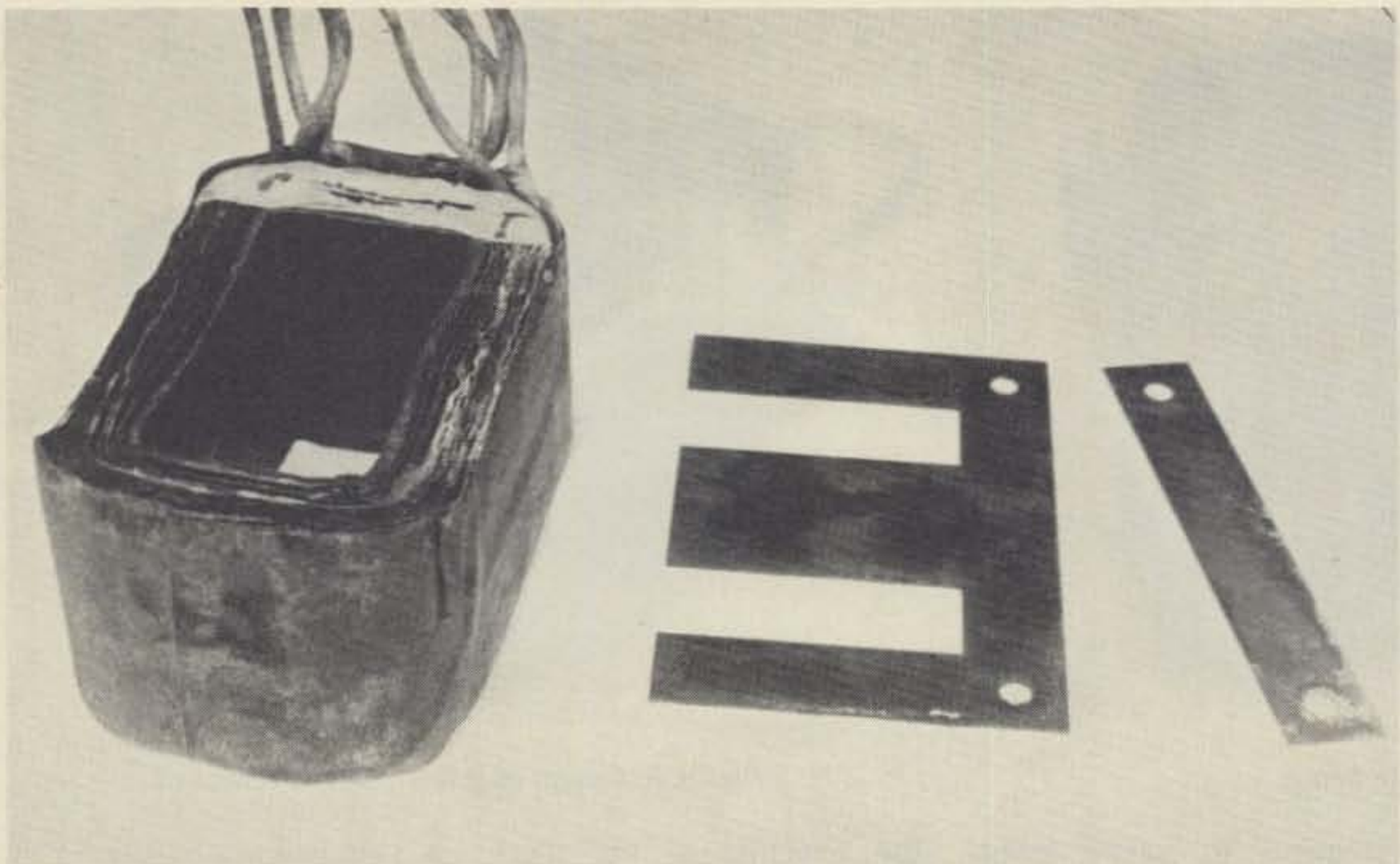

Photo C. Laminations removed.

current, and each half of the secondary winding carries only half of the total current.

What this means is that, for a given wire size and a given current rating of a diode, I can get twice the current from the full-wave center-tapped circuit that I can get from the full-wave bridge circuit. The trade-off is that I must wind on twice as many turns of wire for one circuit as compared with the other.

Now you can see the method in my madness in putting on as many windings as I have room for. I have the option of changing the circuit configuration and can use either circuit, depending on what I want to do with the rewound transformer.

Step Two

Is the transformer any good? I would like to know if the primary is burned out before I start the rewinding process. I am only going to rewind the secondary(s) and not the primary (I hope). I will whip out a little device that I call an anti-fuse-blower. It consists of a 100-Watt light bulb placed in series with the primary of the transformer. If the transformer is bad, the light bulb lights up. If the transformer is good, the light bulb either glows very dimly or doesn't light at all. I'll also use the same device later, after rewinding, to make sure that the rewound transformer is okay and doesn't have any surprises built into it. Connect up the transformer to be rewound as shown in Fig. 1, and let it cook for ten minutes or more. If the 100-Watt light bulb lights up to full brilliance, start looking for another transformer.

Step Three

Identify the windings. If the transformer has standard color-code windings, they will be: primary – black wires; high-voltage secondary – red wires; high-voltage winding center tap – red/yellow; 6.3 V ac heater – green; and 5.0 volt heater – yellow. There may be an extra 6.3 V ac winding (for the picture-tube heater), and there might be an extra 5.0-volt winding. If the color code is something other than standard, or the wire colors have badly faded, then your task is a bit more difficult. (And the anti-fuse-blowing light-bulb circuit will be even more advantageous.)

Since you don't know what the primary is, you haven't got it connected up yet. So ring out the wires. The Squawker, presented in the "Kilobaud Klassroom" series of articles (*Kilobaud* #10, October, 1977), is very handy for this purpose. Use it, an ohmmeter, or a continuity tester, and find out which wires show continuity. The resistance of the high-voltage winding will be enough to change the pitch of the Squawker. Pair up the wires and tag them. (I usually take a short length of scrap hookup wire of the appropriate color and wrap this in a coil around the wire. Two black coils around two wires would identify the wires that I thought were the primary wires, for example.) Next connect the two wires that you think are the primary of the transformer, and see if the light bulb glows dimly. If it glows brightly, then this pair is not the primary. Try another pair. If the light bulb glows dimly, or not at all, then, using a little caution because 300 to 400 volts bites like crazy, short a pair of wires together. This will turn on the lamp to full

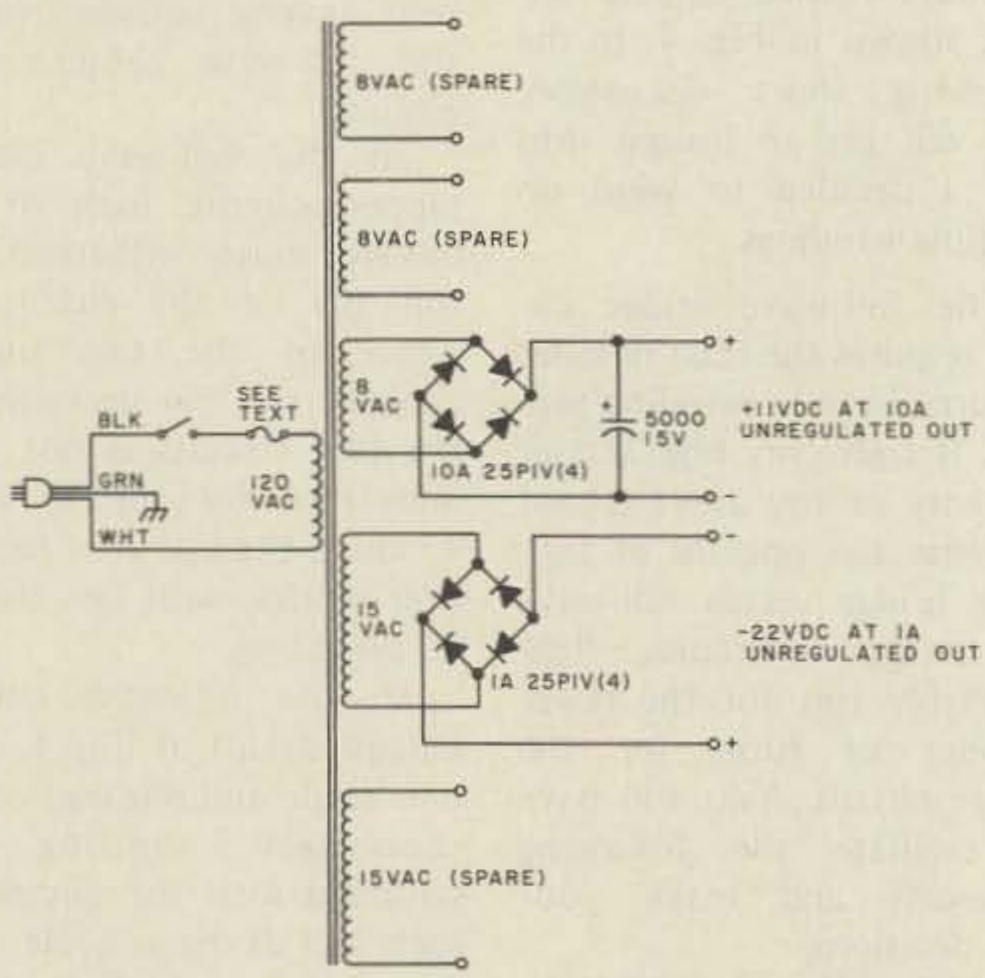

Fig. 3. Full-wave bridge circuit.

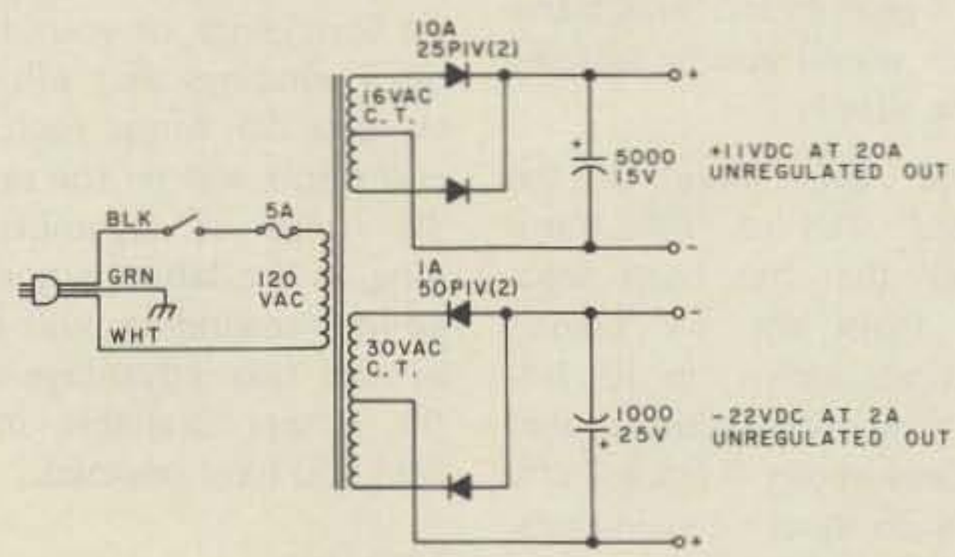

Fig. 4. Full-wave center-tapped circuit.

brilliance. If it doesn't, then you'd better do some checking on your circuit, since you don't have a circuit.

When you think that you have the primary connected to the light bulb and 120 V ac, use a voltmeter to measure the voltages on each identified pair of wires. They may be slightly lower than 5.0 or 6.3 volts because of the lamp in the line, but they'll be close. Watch that high-voltage winding; it's lethal, and we don't want a funeral. The 120 V ac is lethal as well, so use caution. If you don't have a voltmeter, you'll have to find a ham who does, or you'll have to get yourself over to the local high school and use theirs.

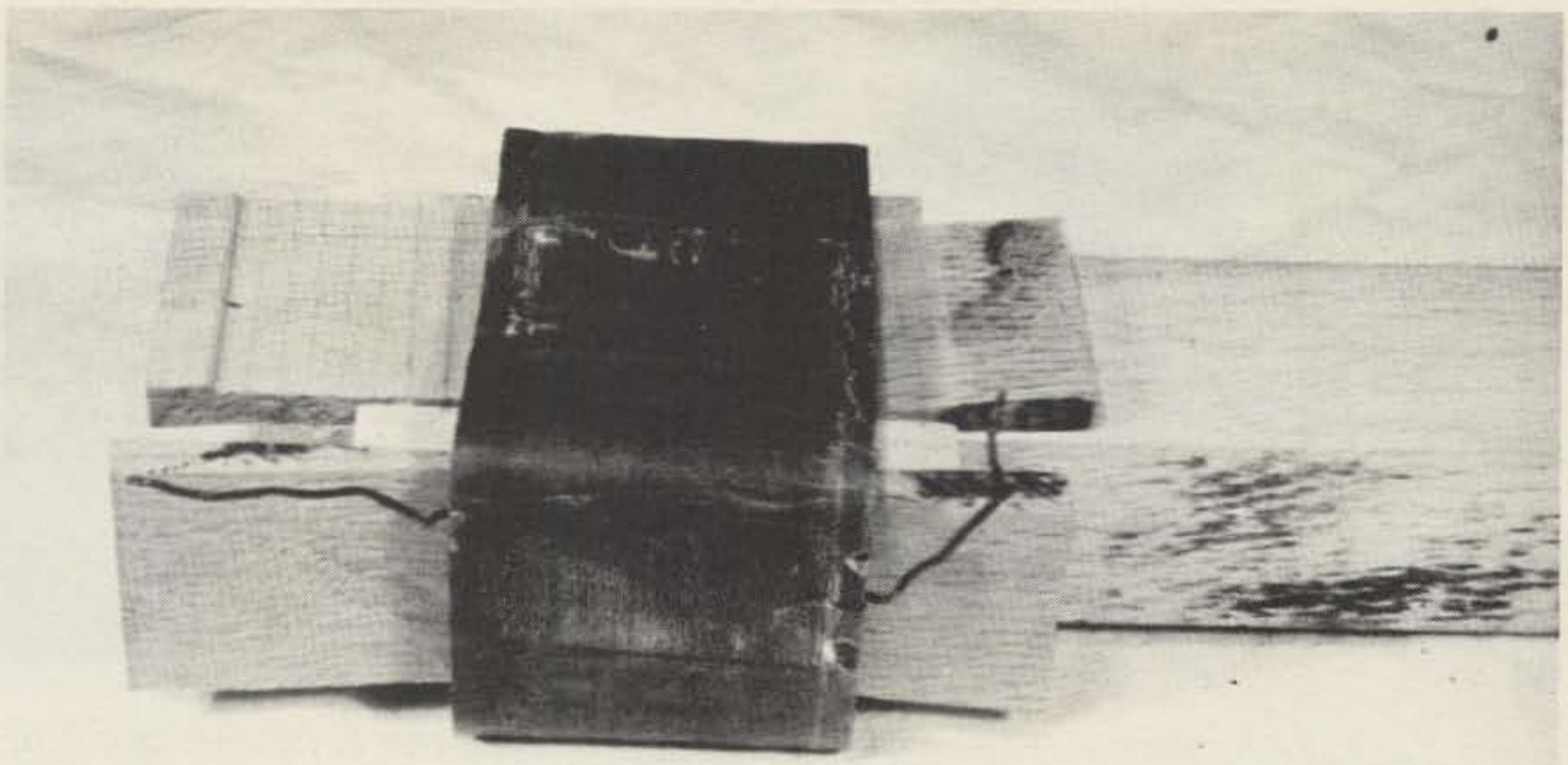

Photo D. Ready for rewinding.

Step Four

Disassemble the transformer. Remove any bolts holding the thing together. Store the bolts to put the transformer back together when finished. The iron is glued together with varnish, so, even after the bolts are removed, the transformer will not fall apart. Remove the covers, if any, and store them. Have a small cardboard box handy to put all the pieces in. Use a thin-bladed knife, such as your spouse's paring knife from the kitchen, and force it in between the outermost lamination. Do each side outside the winding first. Then force it down inside the winding. You are trying to break loose the lamination on the outside that is glued to the rest of the laminations with varnish. Run the knife blade all around until you break this outside lamination loose. Now the lamination must be pulled out. Tapping on it with a small hammer and a thin block of wood sometimes works. Perseverance will eventually pay off. Get it out, and try not to butcher it up any more than you have to. After that first lamination is out, you'll have to look carefully at the remaining laminations.

The main laminations are made from E and I sections (see Photo C). Sometimes they are singly stacked, sometimes in groups of twos, sometimes in groups of threes. I even pulled a transformer apart once that had all the E laminations in one direction, and all the I's in the other direction. You want to separate each group of E's and I's, and remove them from the stack with the varnish gluing them together. They will be reassembled in the same fashion, so study the transformer to see how it was originally made. After the first several groups of laminations are removed, the remainder tend to come out more easily. Place the laminations in the cardboard box. Some transformers have a copper band that encircles the entire winding and laminations. If you have one, remove it. It usually can be slipped off, but hacksaw it off if necessary.

Step Five

With the iron removed, you are ready for a little surgery. Slit the paper in the area of the windings where the wire exits. Peel off the paper and discard it. Work your way inward until you find the crimps that hold the wires to a fairly thick piece of cardboard. At this point, you might be able to identify wire insulation colors where you could not tell the color before, especially if the problem was one of fading. If you are lucky, the winding will be in the following order, starting from the innermost and working outward: primary, high-voltage secondary, 6.3-volt winding, and 5.0-volt winding. There are some very practical reasons for this sequence, so it will be by far the most common sequence encountered. Remove the wires from the crimps, and bend them over to one side out of the way. Remove the 5-volt winding, and count the turns. Write the number of turns for the five-volt winding on the side of the box that holds the laminations. Do not trust your memory. Write this number down. I count ten turns on my transformer.

If ten turns produces 5 volts, I now know that the transformer was wound with 2 turns per volt. Since I want 8 V ac for my 5-volt power supply, I will need 16 turns of wire for 8 V ac and 30 turns for the 15 V ac winding. That's why you count the turns for the 5-volt winding. Next remove the 6.3-volt winding. There should be 6 x 2, or 12-13 turns for this winding.

Now cut the wire leadouts (called flyleads) for the high-voltage winding, but *unsolder* the primary wire flyleads. With your knife, cut the wires for the high-voltage secondary, and remove the windings in layers. Work carefully as you approach the primary winding, as you will want to use this winding intact and undamaged. If you should be so unlucky as to have the primary anywhere else but next to the iron core, then the primary will also have to be rewound. 120 volts at 2 turns per volt means 240 turns will have to be wound back on for the primary of the transformer. You may want to disassemble another transformer rather than rewind the primary.

Step Six

Make a handle for the winding process. Take a rectangular piece of wood slightly smaller than the opening in the core and about 8-10 inches long. Use wooden shims to anchor the handle inside the core firmly. The reason for this is to prevent any distortion of the core during the winding process.

Wrap a piece of scrap wire around the core. Remove it. Measure its length. Multiply this by the number of turns that are to be put on the winding. This gives you the length of wire that you will need for this winding. Since this length will increase for each additional winding added, this step must be repeated after each winding is added. What size wire to use?

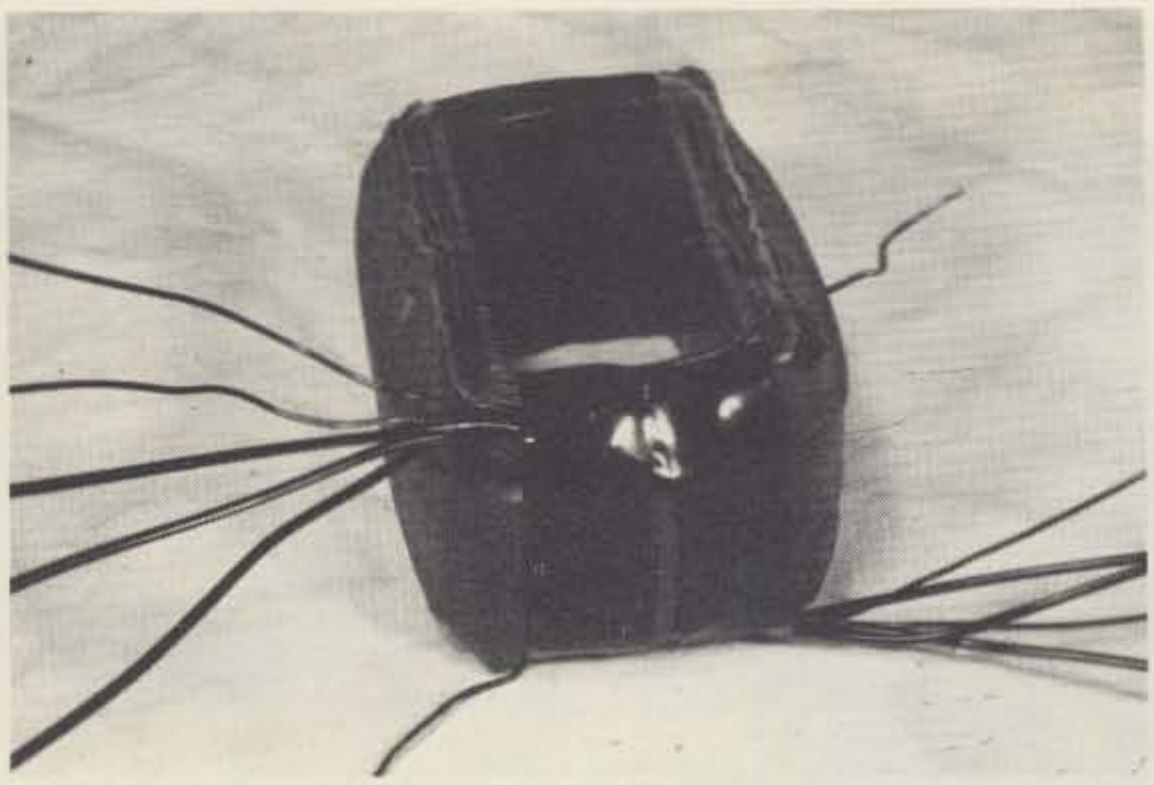

Photo E. Rewound.

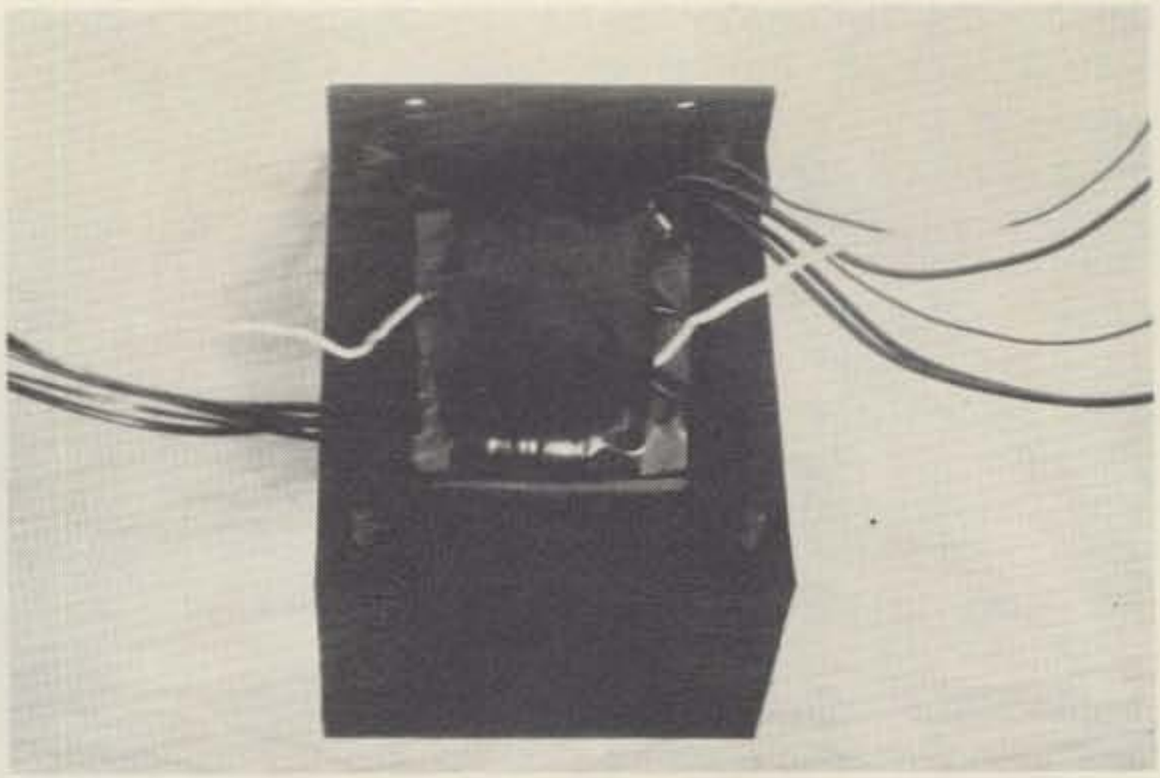

Photo F. Reassembled, with mounting brackets installed, and painted.

The *Radio Amateur's Handbook* has a copper-wire table in the back part of the book. However, no. 12 wire is rated at 20 Amperes, and no. 14 wire is rated at 15 Amperes service for commercial house wiring. Although this is not quite the same as using the wire inside a transformer, it is reasonably close. It can be used as a guide, if you do not have access to a copper-wire table. The wire table suggests #18 wire for 10 Amps and #24 for 1 Amp. If you go 2 wire sizes lower, you will have plenty of safety margin. Use #16 for the 10-Amp winding and #22 for the 1-Amp winding. But I don't have any #16 or any #22. I do have #14 and #18 wire. So I will have about a 200% safety margin.

Since my wire is on a spool, I don't even have to measure it out first. I simply clamp one end of the spool in the vise, after reeling off about 20 feet, and start winding. If I run short, I just unwind a little more to finish up the winding. If you have to go out and buy enough wire, go through the measurement process described earlier, and add a couple feet for safety and flyleads. If you have to buy a 100-foot spool of wire, then don't cut it off first. Just reel off about 20 feet, clamp the other end in a vise, and start winding.

The smaller wire will produce a smoother layer, so it goes on first. The starting of a winding is shown in Fig. 2(a). The finish of a winding is shown in Fig. 2(b). The start and the finish must be on the same side of the winding, as were the original starts and finishes of the windings that were removed. If this step is not followed, you will never get this brute back together when you're done.

I use 2-inch-wide tape, such as masking tape or "sticky green" tape, between each winding. You can use narrower tape, but it will not produce quite as smooth a layer upon which to wind the next winding. Three-quarter-inch plastic electrical tape can be used by slightly overlapping as you wrap. You should use modern enameled wire, such as Formvar™ or Nyclad™. This stuff has really tough insulation. I simply leave the flyleads long enough to use and solder new flyleads to the primary transformer leads.

Step Seven

Reassemble the laminations. You may find that all the original laminations will not go back in. Put in as many as you can without damaging the rewound core, and let it go at that. There should be only one or two groups of laminations that you can't get back in. I never put back the covers. These are for looks and for protection of the windings. They trap heat inside the transformer. Leaving them off makes for a cooler running transformer, especially if you don't get back in all the laminations that came out.

Step Eight

Connect the lamp again in series with the primary of the rewound transformer. It should not light to full brilliance when the primary and lamp circuit are connected to 120 V ac. It should light to full brilliance when any of the secondary windings is shorted. Measure the voltages for the rewound transformer. They should be very close to the calculated values unless somebody miscounted turns when he was rewinding. They may be slightly low, because the lamp is in series with the primary. If all is well, remove the lamp from the primary circuit and connect directly to 120 V ac. I always fuse the primary for this step, because I then go off and leave the thing plugged in for a couple of hours. The transformer laminations after this time should be warm, but not hot enough to be uncomfortable to the hand.

Step Nine

The rewound power transformer must be mounted in some fashion. The simplest way that I know to do this is to use angle brackets. Two pieces of extruded right-angle aluminum are cut to the length of one of the dimensions of the iron. Two holes are bored that will align with the transformer bolts. The transformer is placed on a wooden surface, and a block of wood is used to tap on and realign the iron laminations. Alternate sides are tapped until all surfaces are satisfactorily plane. The bolts are then inserted, passing through the aluminum brackets, and cinched down. The windings are then masked off, and the laminations and the brackets are given a coat of flat-black spray paint. This completes the transformer.

Step Ten

The current drawn by the primary will be 95 Watts divided by 120 volts, or a little less than 1 Ampere. A 2-Ampere fuse will provide a 100% overload condition before blowing. This is the starting point for the fusing. A filter capacitor appears as a dead short to the diodes in the power supply upon start-up, so the chances of the 2-Amp fuse blowing are pretty good. This fuse will later be increased to as much as 5 Amperes in the finished circuit. If this blows, you can be reasonably certain that there is something else wrong.

The diodes selected for the bridge power supply configuration must each carry the full rated load of 10 Amperes. I plan to use 10-Ampere diodes for this supply, but 25-Ampere diodes would be a better choice, as

they would have a far greater safety margin. I will use the largest filter capacitor for the 5-volt supply that I can find – 100,000 uF, if I can find one I suggest at least 5000 uF for the 5-volt supply and at least 1000 uF for the 12-volt supply.

I expect 8 x 1.41 volts from the 8-volt winding, or approximately 12 V dc. Therefore, the working voltage of this filter capacitor will have to be at least 12 volts, preferably 15 V dc. I expect about 1.5 times 15 volts for the 15-volt winding, so this filter capacitor will need at least a 25 V dc rating.

Figs. 3 and 4 give the unregulated power supply circuits. You may have wire or components on hand which will dictate which of the circuits you will use. Fig. 3 shows the windings that I had room for in the beast that I rewound. The major portion of the labor involved is in taking apart the laminations and in putting them back in. Putting on the windings themselves is actually a small part of the labor.

The piv (also peak reverse voltage or prv) ratings of the diodes should be 25 piv. As mentioned earlier, it is difficult to find diodes with a lesser piv. This piv rating will be satisfactory for both the 8-volt and the 15-volt windings of Fig. 3. Twenty-five piv diodes will be satisfactory for the 16-volt center-tapped windings of Fig. 4, but 50 piv diodes will be required for the 30-volt center-tapped winding of Fig. 4.

Photo G. The beauty. Possible output from regulators: 45 Amps @ 5 V; 10 Amps @ 12 V. Weight – 21 pounds!

The diodes should be mounted on a heat sink. This is especially true if the diodes are to be operated at anywhere near their rated current capacity. The diodes must be insulated from the heat sink, but they must have thermal conductivity to the heat sink.

Conclusion

The photographs show the stages of beast to beauty. The finished unregulated supply is just under 17 inches long and only as wide as necessary to hold all the components. It was designed to fit into the rear of a cabinet that will take 19-inch panel racks.

The unused space at the right of Photo G, showing the finished supply, can be used for additional filter capacitors, or it can be used to mount the regulator circuits. I haven't decided yet which to do with it.

The aluminum rear apron is a 5¼-inch rack that was cut off to 16-3/4 inches. I used two 4000 uF capacitors in parallel for 8000 uF for the 5-volt unregulated supply. These are paralleled with two strips of scrap double-sided printed circuit board, which makes a handy solderable bus material. Two more 4000 uF capacitors were used for the 12-volt filters.

I found two 6-Ampere bridge rectifier circuits for the 15-volt windings and used them. They can be seen mounted on the panel at the left of the transformer.

I could not find four 10-Ampere diodes or any other heavy-current diodes that were suitable. I used 4 power transistors. I have been teaching in Kilobaud Klassroom that transistors are two diodes mounted back to back, so I decided to see just how four 15-Ampere collector-base junctions would fare used as power diodes. They work fine. The only problem was that the ones I had available were salvaged off printed circuit boards and had very short leads. This presented some difficulties in getting heavy wire connected to the cut-off base leads, but perseverance finally paid off. The transistors were insulated from the heat sink with transistor-mounting kits, and liberal amounts of silicone grease were smeared between panel and transistor case. The entire rear apron is a heat sink. ■

New Products

from page 62

between the output of the transmitter (or amplifier) and the antenna or tuner. Ordinary PL-259 coax connectors will couple correctly with the SO-239 receptacles on the sensing unit.

In addition to selectable 200-/2000-Watt forward power scales, the DenTron W-2 features an operating frequency range of 1.8-30 MHz and meter accuracy of ±5%. The unit measures 7 x 3½ x 6 inches (the removable sensor box is 4 x 2½ x 2½ inches) and weighs 5 lbs. Attractively packaged in a cabinet with black finish that matches the rest of the DenTron product line, the W-2 makes a most practical addition to the shack.

The DenTron W-2 wattmeter is priced at $99.50. *DenTron Radio Co., Inc., 2100 Enterprise Parkway, Twinsburg OH 44087.*

Morgan W. Godwin W4WFL
West Peterborough NH

CSC INTRODUCES NEW $89.95 CALCULATOR-SIZE 50 MHz COUNTER

CSC has introduced their new Mini-Max counter, a surprisingly small, surprisingly inexpensive counter with 50 MHz guaranteed performance.

The Mini-Max counter is in a small (3" x 6" x 1½") calculator-style case. It features a six-digit magnified LED display with 100 Hz resolution. Decimal points after the second and fifth digits act as pilot lights and indicate MHz and kHz points on the display.

The counter display updates ten times per second, permitting easy "speed-read" mode frequency tuning without the usual one second delay between counter readings.

A UHF FET preamplifier provides very capable weak-signal performance, permitting the Mini-Max to be driven directly from an optional accessory whip antenna. In addition to high sensitivity, this FET front end means a high input impedance (greater than 1 megohm) for minimal loading and a highly linear input.

Using a standard TV color burst crystal for its timebase, the Mini-Max achieves ±3 ppm timebase accuracy, user-

Continued on page 73